SHINDENGEN

Super Fast Recovery Rectifiers

Single

D2FL40

400V 1.3A

FEATURES

- Small SMT
- Low noise
- trr50ns

APPLICATION

- Switching power supply
- DC/DC converter
- Free Wheel
- Home Appliances, Office Equipment
- Telecommunication, Factory Automation

OUTLINE DIMENSIONS

Case : 2F

(Unit : mm)

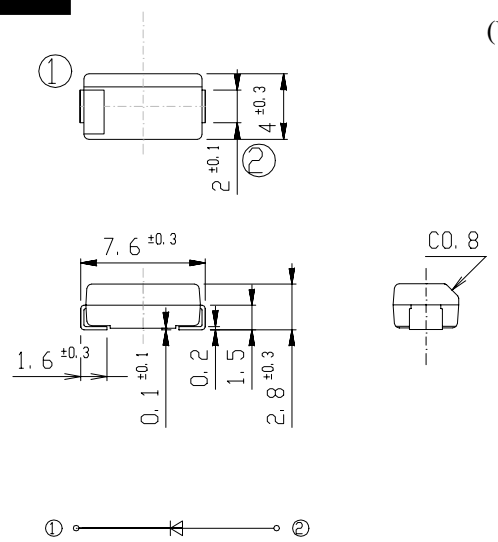

RATINGS

●Absolute Maximum Ratings (If not specified Tl=25℃)

Item	Symbol	Conditions	Ratings	Unit
Storage Temperature	Tstg		-40～150	℃
Operating Junction Temperature	Tj		150	℃
Maximum Reverse Voltage	V_{RM}		400	V
Average Rectified Forward Current	I_O	50Hz sine wave, R-load, Ta=25℃ On alumina substrate	1.3	A
		50Hz sine wave, R-load, Ta=25℃ On glass-epoxy substrate	1.05	
Peak Surge Forward Current	I_{FSM}	50Hz sine wave, Non-repetitive 1 cycle peak value, Tj=25℃	40	A

●Electrical Characteristics (If not specified Tl=25℃)

Item	Symbol	Conditions	Ratings	Unit
Forward Voltage	V_F	I_F=1.3A, Pulse measurement	Max.1.3	V
Reverse Current	I_R	V_R=V_{RM}, Pulse measurement	Max.10	μA
Reverse Recovery Time	trr	I_F=0.5A, I_R=1A	Max.50	ns
Thermal Resistance	θ jl	junction to lead	Max.24	℃/W
	θ ja	junction to ambient, On alumina substrate	Max.90	
		junction to ambient, On glass-epoxy substrate	Max.120	

Copyright & Copy;2000 Shindengen Electric Mfg.Co.Ltd

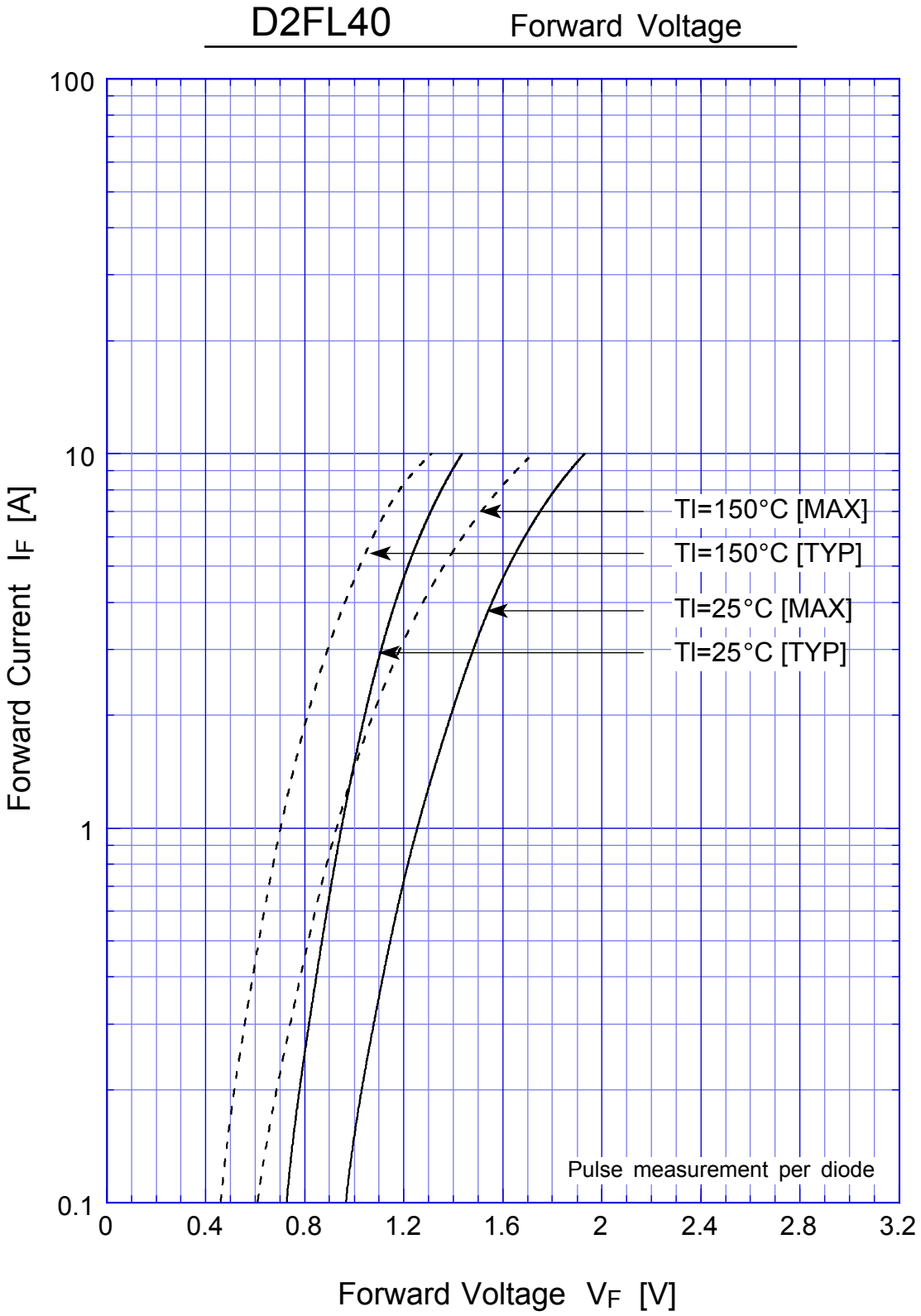
D2FL40
Forward Voltage
100
10
1
0.1
0
0.4
0.8
1.2
1.6
2
2.4
2.8
3.2
Forward Current IF [A]
Forward Voltage VF [V]
Tl=150°C [MAX]
Tl=150°C [TYP]
Tl=25°C [MAX]
Tl=25°C [TYP]
Pulse measurement per diode

D2FL40 Forward Power Dissipation

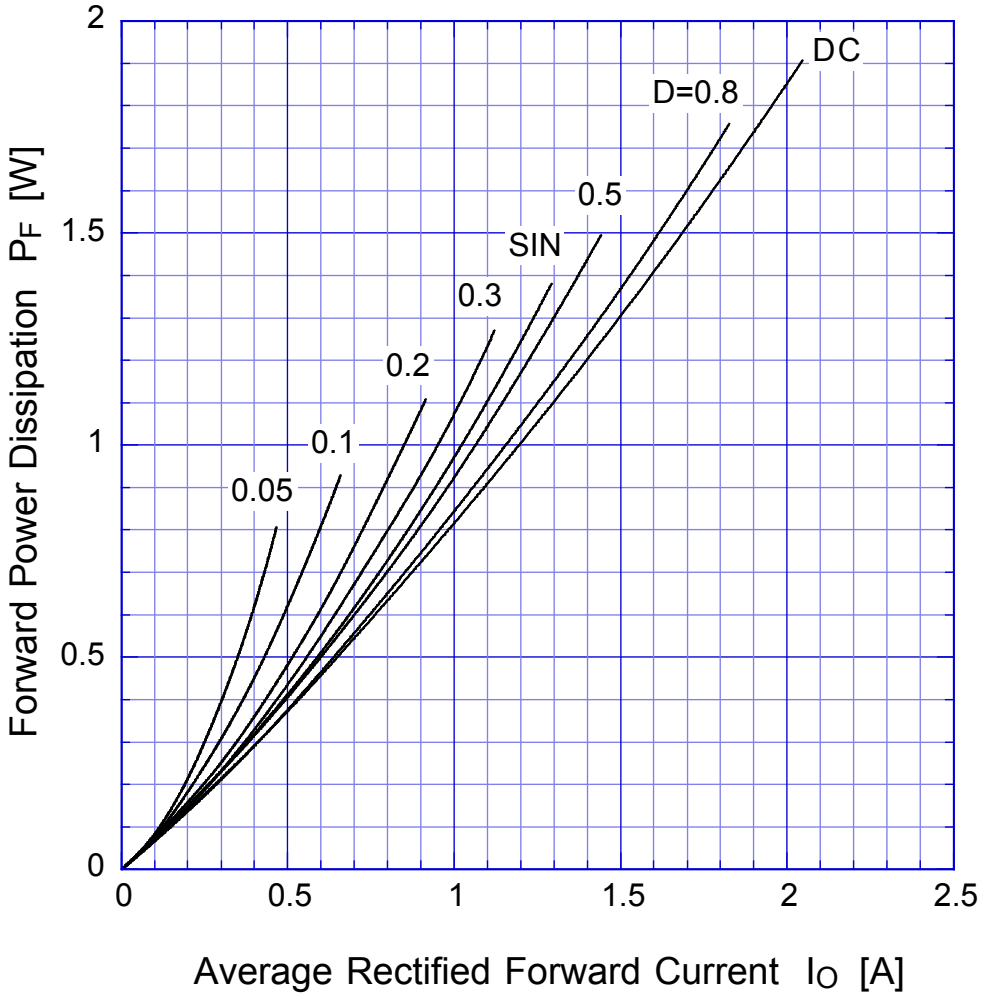

Tj = Tjmax

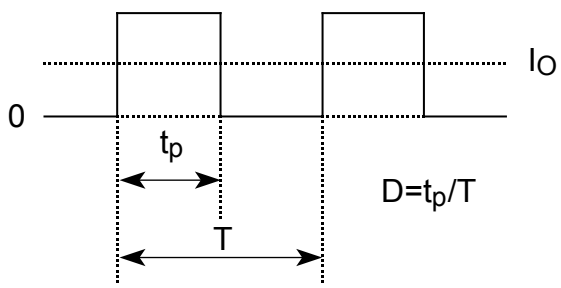

D2FL40 Derating Curve

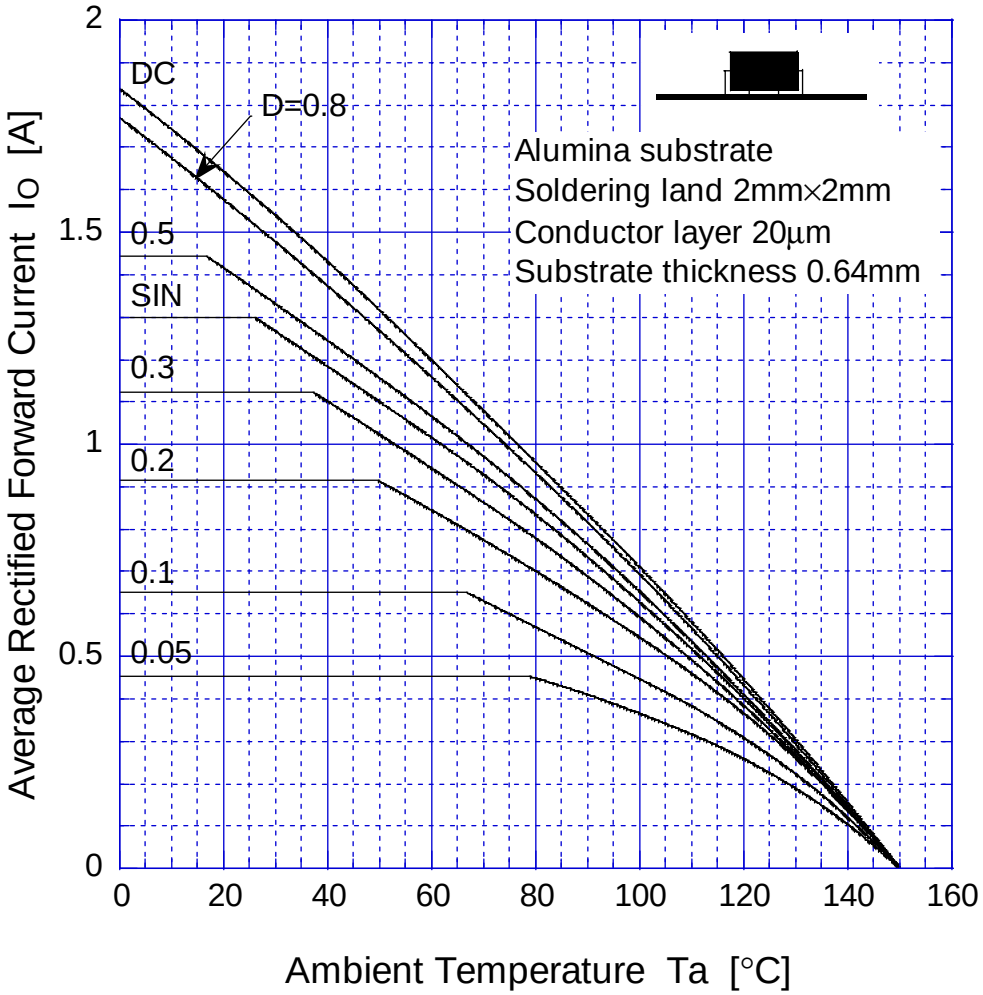

$V_R = V_{RM}$

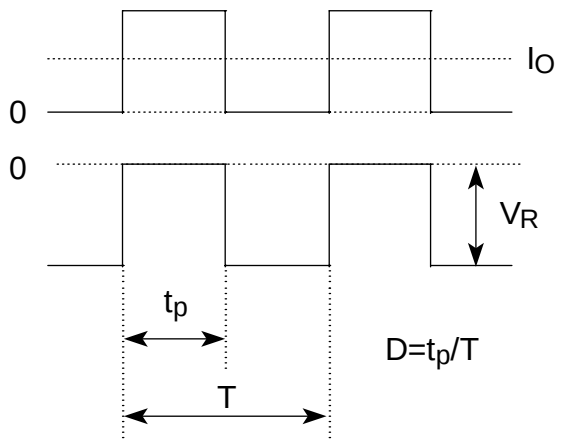

D2FL40 Derating Curve

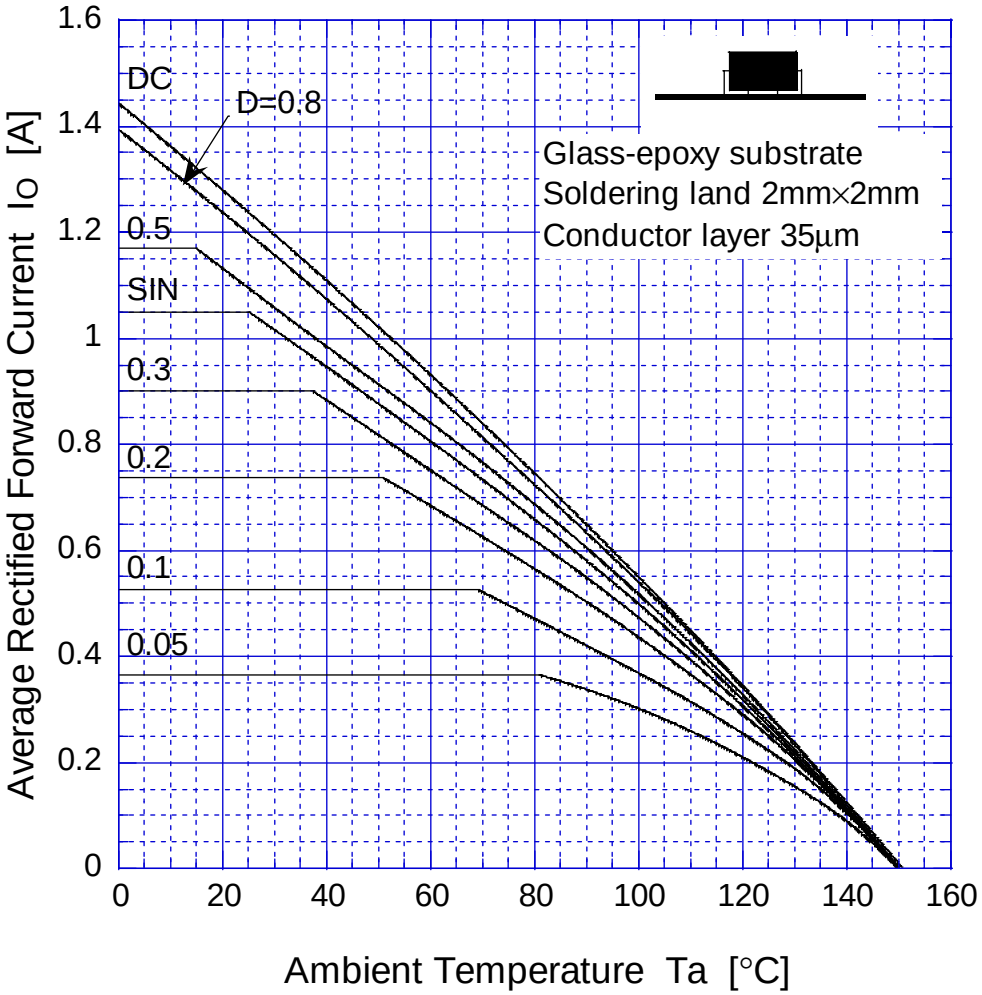

$V_R = V_{RM}$

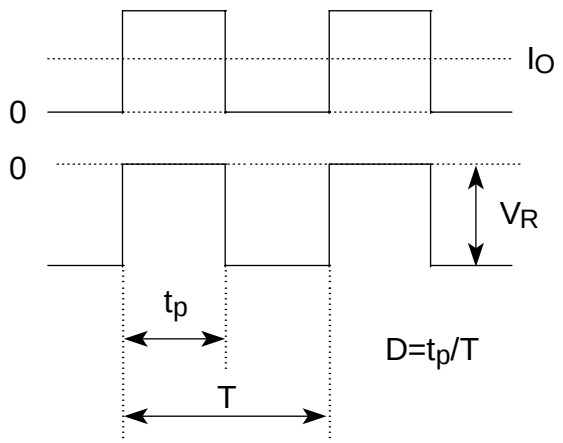

D2FL40 Peak Surge Forward Capability

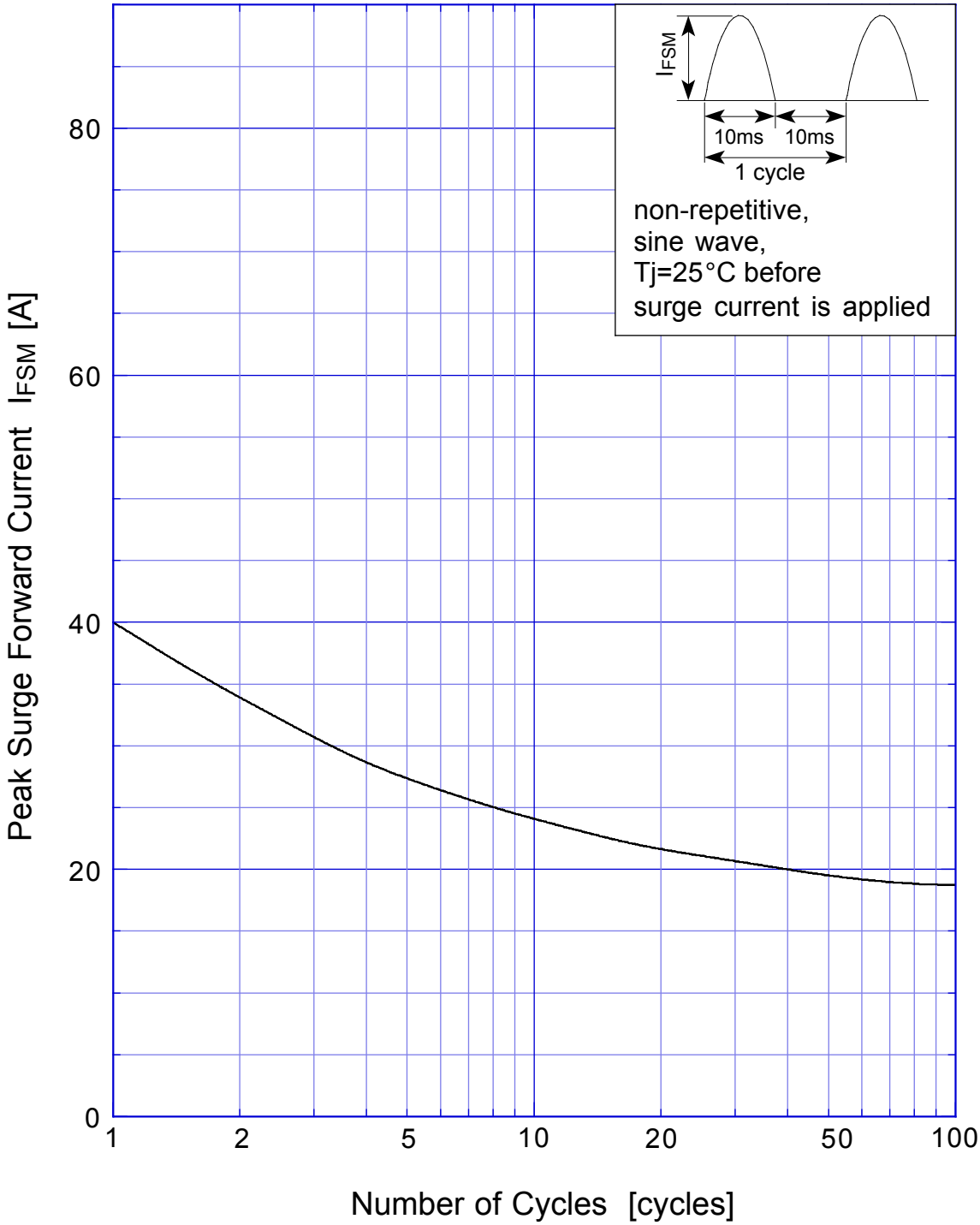

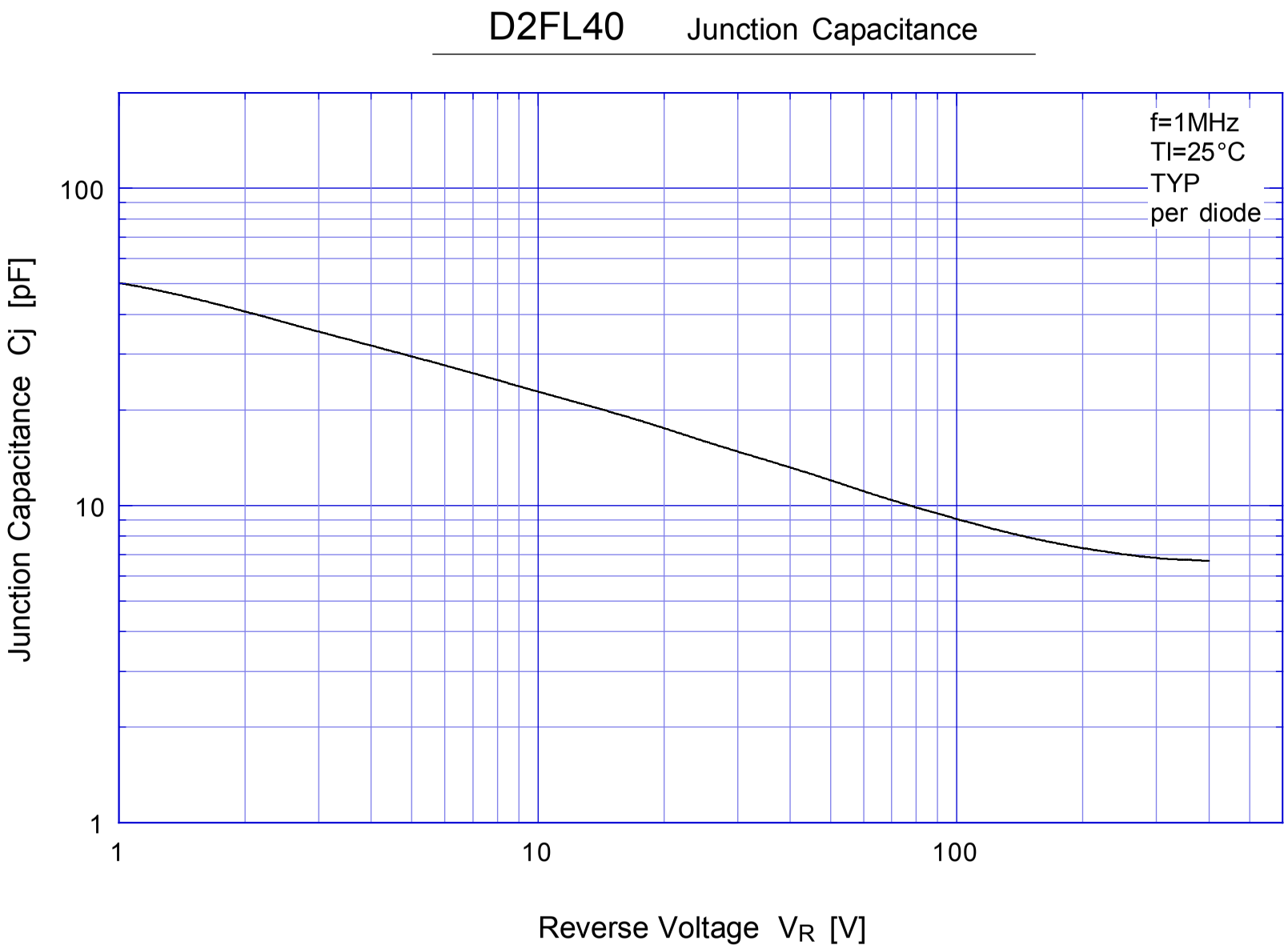
D2FL40 Junction Capacitance
f=1MHz
Tl=25°C
TYP
per diode
100
10
1
1
10
100
Junction Capacitance Cj [pF]
Reverse Voltage VR [V]